CONTEMPORARY COLLECTION

Italy

archiproducts DESIGN AWARDS — WINNER 2017

CRISTINA

CRIIT249

Combining industrial production with artisanal craftsmanship, this series embodies the excellence of Made in Italy. The design modernizes the classic styles of the 1920s with elegance, refinement, and the use of materials like marble and stone. The series allows numerous finishes to be paired with various types of marble or stone, offering nearly 50 combinations and thus a wide range of customization options for both classic and contemporary settings. The noble materials and finishes, created through a galvanic process and refined by skilled artisans, ensure high standards of both technical and aesthetic quality. The handles, crafted from solid blocks of marble or stone, define the design with their texture and color. The mixer body is made of brass, with a rectangular spout featuring an aerator for a waterfall flow. The intricate details of the knobs, inspired by crystal and precious stone craftsmanship, along with rosettes that echo traditional wood paneling, complete the sophisticated and luxurious design.

Before ordering items requiring certifications on particular markets, please check with your sales contact

Technical description

Large external single-control wall-mounted 2-hole washbasin set, metal plate, with progressive mixing, 1 1/4" Up&Down* waste, spout length 225 mm, for completion with recessed part CRICS200 (control on the right) CRICS201 (control on the left)

COMMAND
Single-control

INSTALLATION
Wall-mounted

TYPOLOGY
External set

ENVIRONMENT
Bathroom

FLOW RATE
5,6 l/min

FINISHES

- 34P - Brushed Copper Pvd
- 51 - Chrome
- 75 - Brushed Black Chrome
- 46P - PVD Polished Rose Gold
- 72 - Polished Black Chrome
- 77 - Brushed Metallic

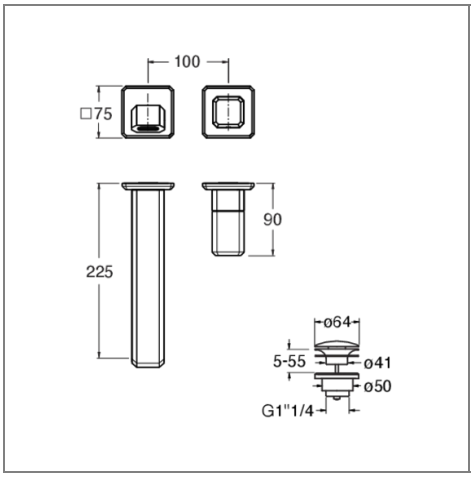

Built-in part

CRICS200

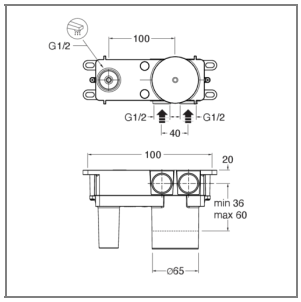

Recessed set for single-control wall-mounted washbasin/bidet mixer, control on the right

CRICS201

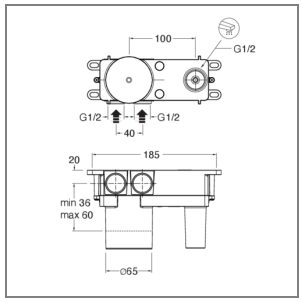

Recessed set for single-control wall-mounted washbasin/bidet mixer, control on the left

CRISTINA S.r.l. Via Fava, 56 28024 Gozzano (NO) Italy
Tel. +39.0322.9545 | Fax +39.0322.956556 | info@cristinagroup.com
C.F e P.Iva. 00309260032 | Capitale Sociale 1.000.000 I.V. | Registro Imprese 00309260032 | Rea NO117362